SM Snowstop for standing seam

Version:

Aluminium	AlMgSi, thickness 1,2 mm,	Article-No.: SM-EHA
Stainless steel	V2A, CrNi-Stahl, Material 1.4301 (AISI 304), thickness 0,8 mm	Article-No.: SM-EHE
Copper	Full copper, thickness 1,0 mm,	Article-No.: SM-EHC

Illustration:

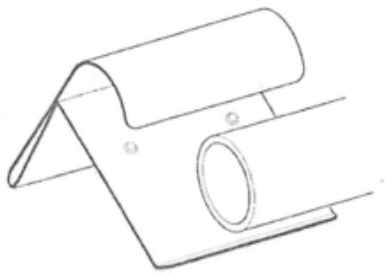

Description:

Snowstop one-piece to install on standing seam roof
for seam high between 25 and 30 mm, width 70 mm

The snowstop will be mounted on the tubes.

Contents each: 1 Snowstop

Packing unit: 100 pcs.

Mounting:

Mount snow stop mainly on the first line of your snow retention system, at the eaves.
You should use 1 to 2 pcs to avoid, that small layers of snow and ice slide down the roof.
If you have installed additional rows of snow retention, sometimes snow stop are installed there too, to minimize wind- and general noises coming of the roof sheet.

Push snowstop slightly against the tube until it snaps in. The tube is enclosed and the two locking points prevent the tube from disengaging.

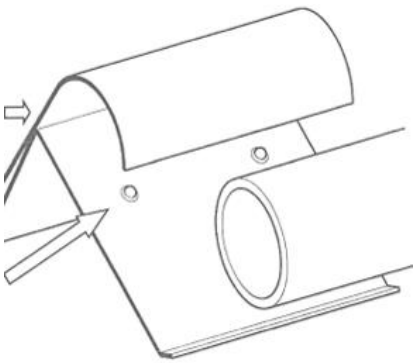

Schneefangsysteme Rees GmbH & Co. KG
Im Steinach 25a · D-87561 Oberstdorf
Phone: +49 8322-94067-0
Fax: +49 8322-94067-99
www.rees-oberstdorf.de
info@rees-oberstdorf.de

SM-Snowstop for standing seam

Notes for execution:

Determining are the local and prevailing climatic conditions, zones of snow-load by DIN 1055-5 (German standard), as well as the roof pitch, its designation and the dimensions of the roof-sheets. These guidelines are necessary for mounting, calculation, arrangements of holders and fixation of the snow retention system. Additionally you have to consider all governmental orders, if available.

If you mount a snow retention system, you have to consider the increased load on the roofing-construction and on the trapezoidal applications.

Please contact us if you have any further questions or if you need any assistance.

Additional equipment for snow retention systems:

Snow retention bracket for single-tube (also available for angled-seam roofing.	Heightening element for double-tube system (in conjunction with an additional single-tube snow retention row)	Double-tube snow retention bracket (in conjunction with an additional single-tube snow retention row)	Tube with a wall Thickness of at least 2 mm Tube connector
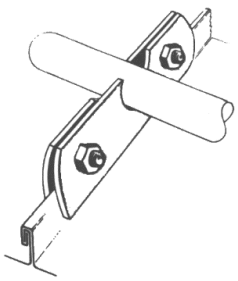		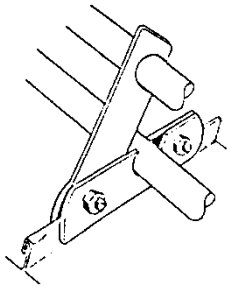	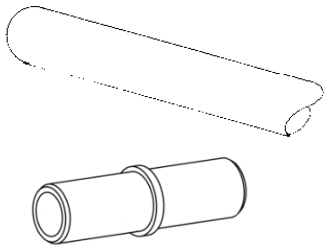

Please note our large product range around metal roofs: snow retention systems, step brackets, solar holders and our program about clips. Further information you will find on our homepage.

Schneefangsysteme Rees GmbH & Co. KG
Im Steinach 25a · D-87561 Oberstdorf
Phone: +49 8322-94067-0
Fax: +49 8322-94067-99
www.rees-oberstdorf.de
info@rees-oberstdorf.de